300 S. DAYTON ST.
DAVISON, MI 48423
PH: 810-503-9000
FAX:810-653-8714

1055-1616RC

DESCRIPTION:
CONNECTS 16 IN. AC/DI TO 16 IN. AC/DI

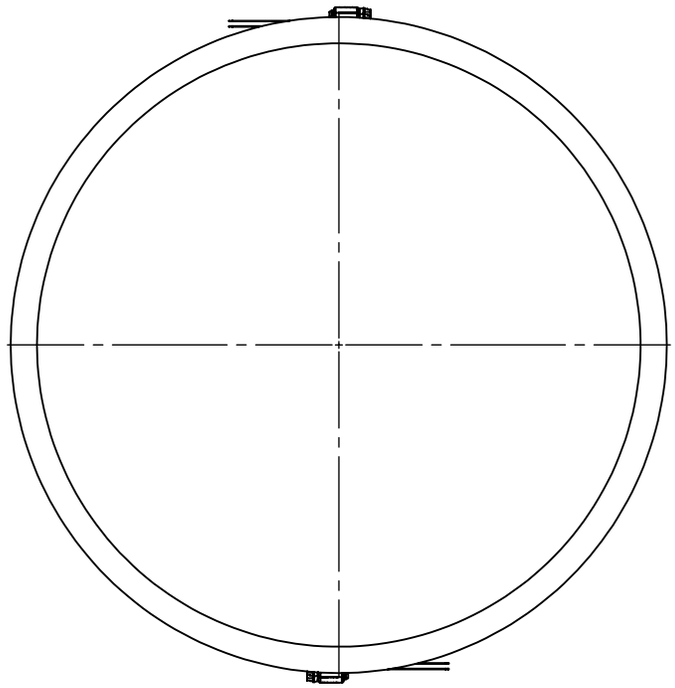

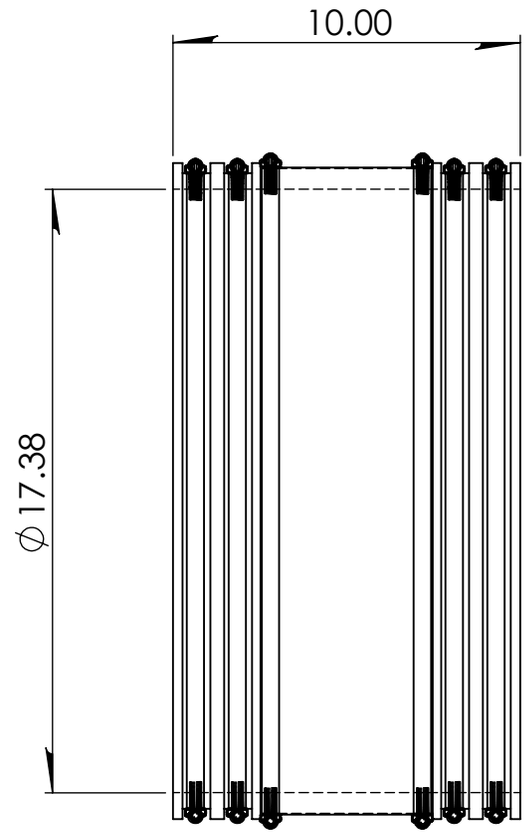

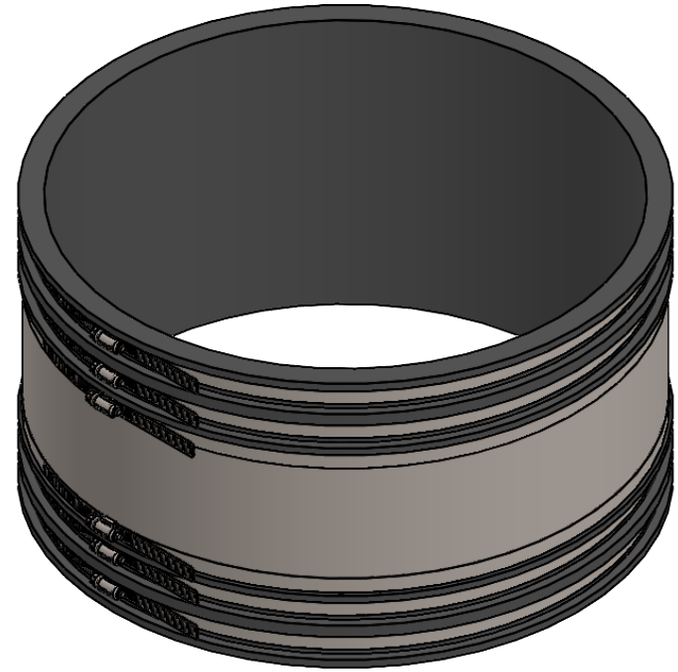

NOTE:

PROPRIETARY AND CONFIDENTIAL
THE INFORMATION CONTAINED IN THIS DRAWING IS THE SOLE PROPERTY OF FERNCO, INC. ANY REPRODUCTION IN PART OR AS A WHOLE WITHOUT THE WRITTEN PERMISSION OF FERNCO, INC. IS PROHIBITED.

TOLERANCES:
FRACTIONAL ± 1/4"
.XX= ±.06
ANG.= ±3°
UNLESS OTHERWISE SPECIFIED

MATERIAL	PVC	CLAMPS USED	300 SERIES STAINLESS
PART WEIGHT		INSTALLATION TORQUE	60 IN · LBS
BOX QUANTITY		MIN/MAX TEMP.	-30/140 °F
PRESSURE TESTED		ASTM	C1173/D5926

UNITS: INCHES
SIZE: A
AUTHOR: GRANT ROE
SCALE: NOT TO SCALE
3RD ANGLE PROJECTION
DO NOT SCALE DRAWING
CHECKER:
DATE: 11/1/2022
SHEET 1 OF 1